ISSUED JUNE 2026 • INDEX NO. AU/10.5

Automated MIG Welding Systems

Auto Deltaweld™ 350

QUICK SPECS

General Manufacturing
Heavy industrial manufacturing
General fabrication
Structural steel fabrication
Transportation
Sheet metal fabrication
Light-gauge tube and sheet

Processes
MIG (GMAW)
Flux-cored (FCAW)
Metal-cored (GMAW-C)
Accu-Pulse® MIG (GMAW-P)
RMD® (Regulated Metal Disposition)
Versa-Pulse™ (GMAW-P)
High-deposition MIG (GMAW)
Profile Pulse™

Input Power
380/400 V three-phase, 50 Hz

Rated Output
350 A at 60% duty cycle

Output Range
20–400 A, 10–38 V

Designed for integrators, Auto Deltaweld is your direct path to incorporate Miller welding technology into your portfolio.



Auto Deltaweld 350 shown with user-supplied cobot.



Auto Deltaweld 350 shown with Auto Elite wire drive on user-supplied robot.





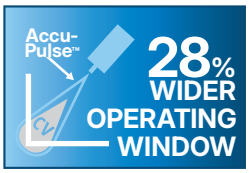

Easy to use
Programming and operation is driven by the automation system controller. Weld process settings can also be accessible via the web-page interface.

Advanced welding processes
Specific applications require specific welding processes, utilize the advanced welding processes provided in the Auto Deltaweld to improve quality and boost productivity.

Easy to integrate
Auto Deltaweld provides both Modbus TCP and EtherNet/IP for direct communications to your automation system.

TRUE BLUE® 3YR. WARRANTY

Power source is warrantied for three years, parts and labor.
Original main power rectifier parts are warrantied for five years.

Miller®

International Headquarters
Miller Electric Mfg. LLC
An ITW Welding Company
1635 W. Spencer Street
Appleton, WI 54914 USA
MillerWeldsEurope.com

Miller Europe
Orbitalum Tools GmbH
Josef Schuettler Str. 17
78224 Singen, Germany
Tel.: +49 7731 792 400
sales.MILLER@itwwelding.com

ITW WELDING SALES OFFICE UK
Unit 38 Gerards Park, College Street
St Helens WA10 1FZ
United Kingdom
Tel.: +44 1695 585 910
sales.UK@ITWwelding.com

Auto Deltaweld™ 350 Features



Ethernet communication receptacle allows webpage display and access for weld set up, troubleshooting, and power supply configuration.

USB access for software updates, and fault information downloading.







Status indicator LED lights indicate communication and connectivity.

Wind Tunnel Technology™. Internal air flow that protects electrical components and PC boards from dirt, dust and debris — greatly improving reliability.

Fan-On-Demand™ operates only when needed reducing noise, power consumption, and the amount of airborne contaminants pulled through the machine.



Ethernet communication receptacle allows for both Modbus TCP and EtherNet/IP communication protocols to directly communicate with your automation system.



ArcConnect™ is a next generation communication that utilizes high speed signals to improve weld performance and allow point-of-use controls to be located at the feeder.

Auto Deltaweld™ 350 Specifications (Subject to change without notice.)

MODE	INPUT POWER	OUTPUT RANGE	RATED OUTPUT	AMPS INPUT AT RATED OUTPUT, 50HZ				DIMENSIONS	NET WEIGHT
				380V	400V	KVA	KW		
MIG (GMAW)	Three-phase	10–38 V	300 A at 29 VDC, 100% duty cycle	16.3	15.2	10.6	9.7	H: 471 mm W: 390 mm D: 740 mm	52.2 kg
			350 A at 31.5 VDC, 60% duty cycle	20.4	19.2	13.4	12.3		
			425 A at 35.25 VDC, 30% duty cycle	27.0	25.7	17.8	16.7		

Mounting Specifications

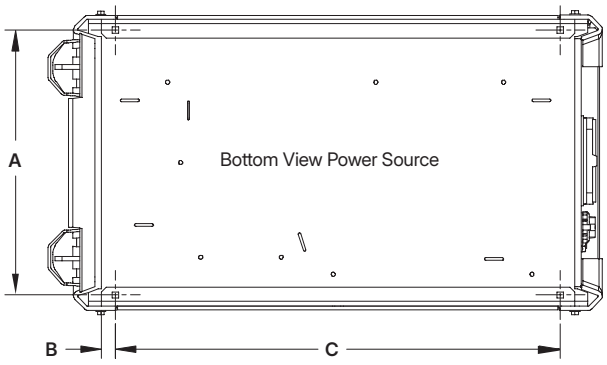

A. 356 mm
B. 533 mm
C. 597 mm

Height: 471 mm
Width: 390 mm
Depth: 740 mm

Performance Data

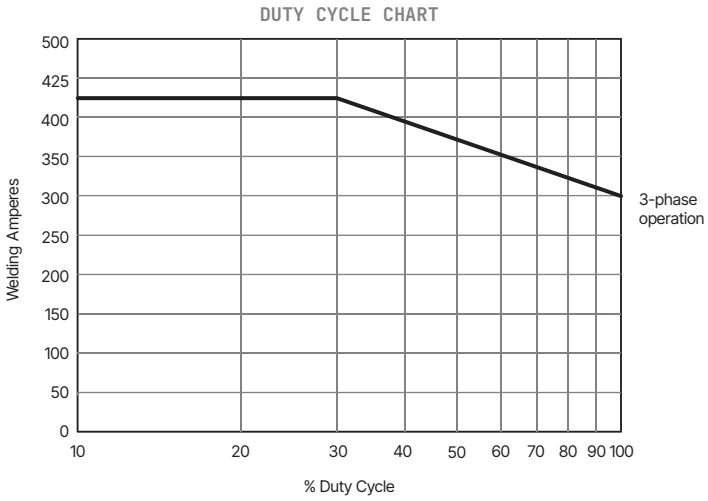

System Processes

BEST FOR	STANDARD SPRAY	HD MIG	ACCU-PULSE	VERSA-PULSE	SHORT CIRCUIT	RMD
Deposition	A	A	A	B	D	D
Gap filling	D	D	B	B	A	A
Low heat input	D	C	B	A	A	A
Out-of-position welds			A	B	B	B
Low spatter	A	A	A	B	C	B
Thick metals	A	A	A	C	D	D
Thin metals			B	A	A	A
Increased travel speed	A	A	A	A	B	C
	HOT					COLD

***Ratings A, B, C, and D** are relative values. An "A" rating indicates a best fit between your performance needs and process. A "blank" rating indicates that the process is not recommended for that application.*

For more information on advanced welding processes visit: MillerWelds.com/technologies/advanced-welding-processes

MIG
Lower spatter than traditional MIG welders

Accu-Pulse®
- The most popular process for majority of industrial welding applications
- Most adaptive arc on 16 gauge (1.6 mm) and thicker
- Designed for all weld positions

Versa-Pulse™
- Fast, low-heat, low-spatter process — for materials 6.35 mm and thinner
- Great for gap filling
- Shortest arc length/lowest pulse voltage for lower heat and lower spatter at higher speeds

High-deposition MIG (HD MIG)
- Higher deposition rates than standard spray transfer on thicker materials
- Designed for welding applications in which spray transfer is preferred

RMD®
- Lowest heat process, best for gap handling
- Limited travel speed

Webpages

Webpages are an easy way to initialize and configure your automation welding system.

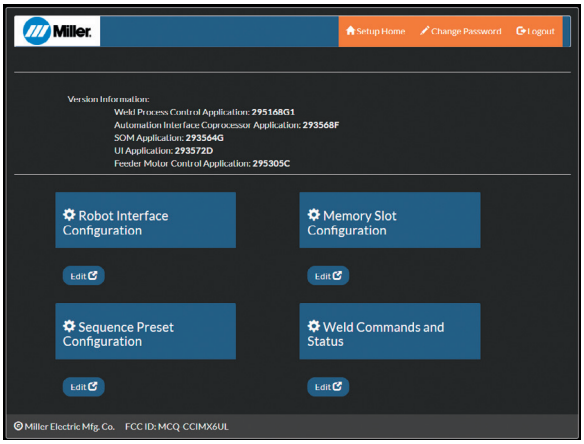

The use of webpage interface connection to the Auto Deltaweld power source:

Direct connect to PC via Ethernet cable

Direct connect through robot controller (if applicable)

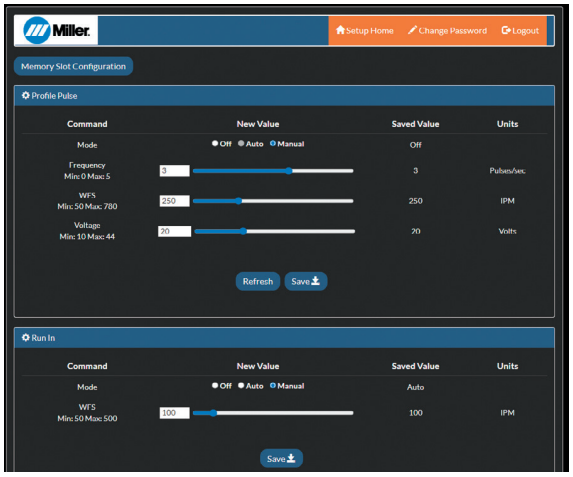

Sequencing and control pages provide the user with more control and improved troubleshooting capabilities

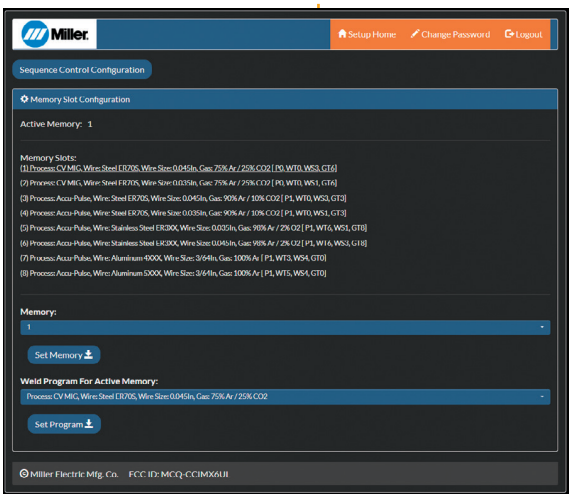

Memory slot configuration provides control of allowable material type, wire diameter and weld process selection

System Features

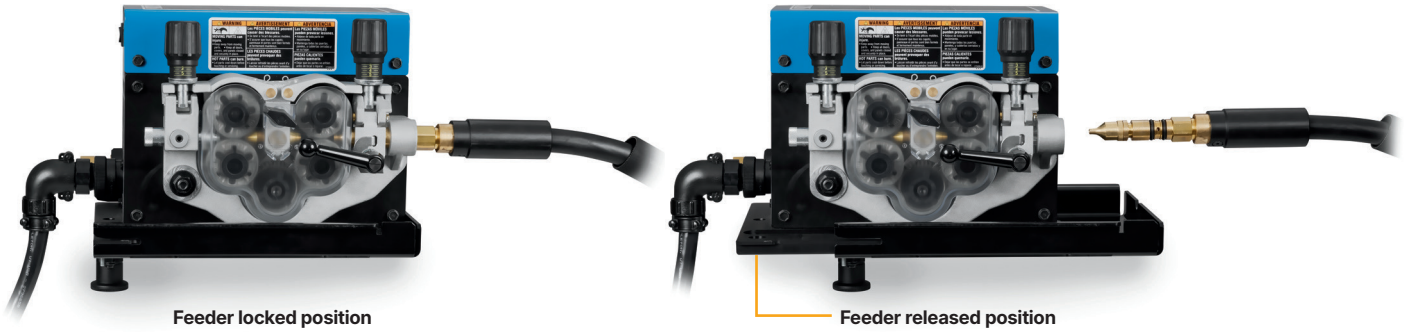

Feeder locked position

Feeder released position

Quick release bracket on the Auto Elite Wire Drive allows rapid exchange of wire drives and easy access to torch liner, resulting in reduced downtime.



Wire drive status indicator light displays wire drive functionality status (power, operation and fault statuses).

Specific robot arm mounting kits. Bolt-on cable management kits allow for quick and easy integration. Optimized cable path management removes undesirable cable strains and improves system reliability.

Auto Deltaweld™ Fixed Wire Drive Specifications (Subject to change without notice.)



Mounting Specifications

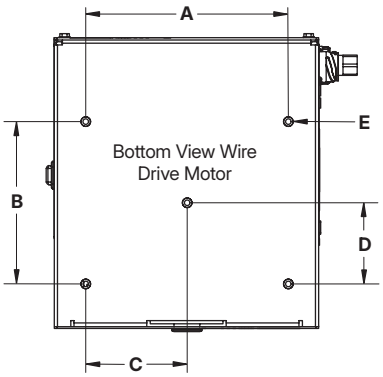

A. 190.5 mm
B. 152.4 mm
C. 95.25 mm
D. 76.2 mm
E. (5) 1/4″-20 threaded holes

Height: 246 mm
Width: 300 mm
Depth: 274 mm

INPUT POWER	WELDING POWER SOURCE	INPUT WELDING CIRCUIT RATING	WIRE FEED SPEED	WIRE DIAMETER CAPACITY	MAXIMUM SPOOL SIZE CAPACITY	DIMENSIONS	NET WEIGHT
50 VDC	Auto Deltaweld 350/500	600 A at 113 VDC, 60% duty cycle	1.3–19.8 m/min.	0.6–2.0 mm	457 mm 27 kg	H: 246 mm W: 300 mm D: 274 mm	9.6 kg

Auto Elite Wire Drive Specifications (Subject to change without notice.)



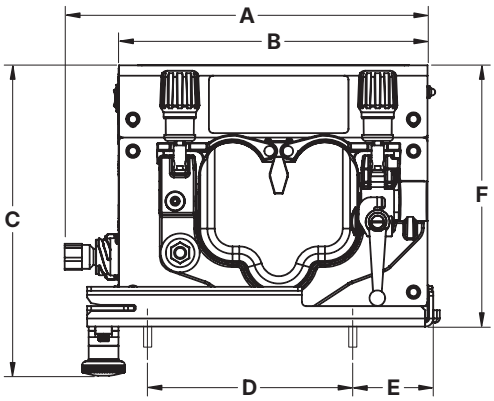

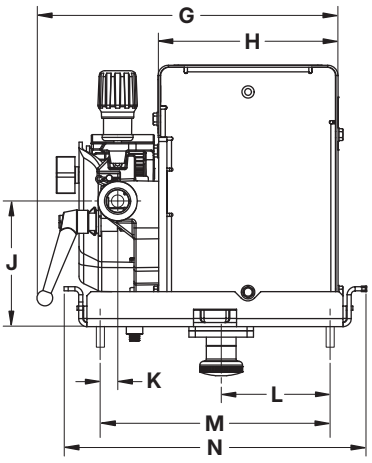

Mounting Specifications

A. 281 mm
B. 239 mm
C. 240 mm
D. 159 mm
E. 62 mm
F. 202 mm
G. 233 mm
H. 139 mm
J. 97 mm
K. 13.5 mm
L. 84 mm
M. 178 mm
N. 234 mm

INPUT POWER	WELDING POWER SOURCE	INPUT WELDING CIRCUIT RATING	WIRE FEED SPEED	WIRE DIAMETER CAPACITY	DIMENSIONS	NET WEIGHT
50 VDC	Auto Deltaweld 350/500	600 A at 113 VDC, 60% duty cycle	1.3–19.8 m/min.	0.6–2.0 mm	H: 202 mm W: 233 mm D: 281 mm	7.5 kg

Genuine Miller® Accessories

Mounting And Spool Support

301752 Fixed wire drive base and spool support
301753 Upright with HUB and spindle

Volt-Sense Cable 242212050
15.2 m cable for Miller® automation power sources.

Ethernet Cables

300734 3 m
300736 10 m

Industrial-grade 360-degree-shielded Cat 5 Ethernet cable with conventional RJ45 overmolded four-pole connector on one end to connect to factory network, and industrial M12 overmolded connector on the other end to attach to Auto Deltaweld power source. Cable supports 10/100 Mbits-per-second transmission rate.

Note: Power source includes a 2 m Ethernet cable.



Tregaskiss® High-Deposition MIG Consumables

401-9-75 Nozzle
D-ATSH Diffuser



Wire Straightener

141580 For 0.9–1.1 mm wire.
141581 For 1.6–3.2 mm wire.

Helps reduce the cast in wire to improve wire feeding performance and increase the service life of the gun liner and contact tip.

Coolant Systems

Deltaweld cooler 7500000005

5 liter cooler for use with water-cooled torches. Directly connected to the ADW.

Cooler Options

043007 Coolmate™ 3 (115 V)
043008 Coolmate™ 3 (230 V)
042288 Coolmate™ 4 (115 V)
See literature AY/7.2.

Coolant 043809

Sold in cases of four one-gallon recyclable plastic bottles. Miller coolants contain a base of ethylene glycol and deionized water to protect against freezing to -38°C or boiling to 108°C. Also contains a compound that resists algae growth.

Drive Roll Kits and Guides

Select drive roll kits from chart below according to type and wire size being used.
Drive roll kits include four drive rolls, necessary guides and feature an anti-wear sleeve for inlet guide.

WIRE SIZE	V-GROOVE FOR HARD WIRE 	U-GROOVE FOR SOFT WIRE OR SOFT-SHELLED CORED WIRES 	V-KNURLED FOR HARD-SHELLED CORED WIRES 	U-COGGED FOR EXTREMELY SOFT WIRE OR SOFT-SHELLED CORED WIRES, (I.E., HARD FACING TYPES) 
0.6 mm	**087132**	—	—	—
0.8 mm	**046780**	—	—	—
0.9 mm	**046781**	**044750**	**046792**	—
0.9 and 1.2 mm	**227061***	**244293****	—	—
1.0 mm	**191917**	—	—	—
1.1/1.2 mm	**046782**	**046785**	**046793**	**083319**
1.3/1.4 mm	**046783**	**046786**	**046794**	—
1.6 mm	**046784**	**046787**	**046795**	**046800**
1.8 mm	—	—	—	—
2.0 mm	—	**046788**	**046796**	**046801**

**Drive roll is dual-size reversible with one 0.9 mm and one 1.2 mm groove.*
***Drive roll is dual-size reversible with one 0.9 mm and one 1.2 mm groove which also accommodates 12 mm wire.*

Wire Guides

WIRE SIZE	INLET GUIDE	INTERMEDIATE GUIDE
0.6-1.0 mm	**221030**	**056206**
1.2–1.3 mm)	**221030**	**056207**
(1.6–2.0 mm)	**221030**	**056209**
(2.0–3.2 mm)	**229919**	**056211**

Note: When ordering hard wire kits, retain factory-supplied inlet guide.

Nylon Guides for Feeding Aluminum

WIRE SIZE	INLET GUIDE AND INTERMEDIATE GUIDE KITS
0.9 mm	**293928**
1.2 mm	**293929**
1.6 mm	**293930**

Note: U-groove drive rolls are recommended when feeding aluminum wire.

Typical Cobot Installations (Cobot and fixed/automation pulsed MIG or conventional MIG.)

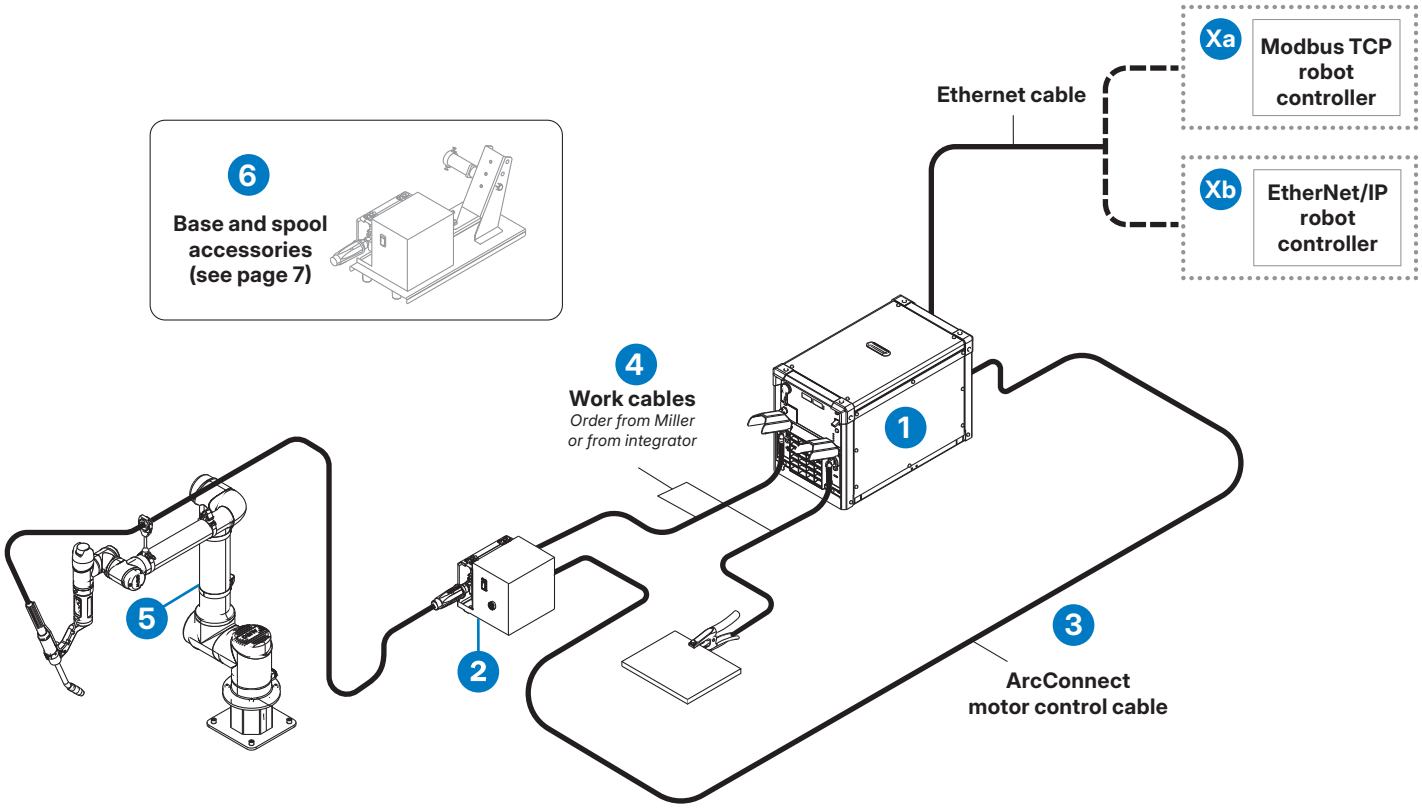

1 Power Source

See page 9. All power sources are equipped with both Modbus TCP and EtherNet/IP communication, and include a 6.7-foot (2 m) Ethernet communication cable.

2 Wire Drive Motor Assembly

See page 9. Auto Deltaweld only operates with a Miller Wire Drive.

3 ArcConnect Motor Control Cable

See page 9 for available ArcConnect cables.

4 Work Cables

Order work cables separately from Miller or from your integrator.

5 Cobot

User-provided cobot.

6 Base and Spool Accessories

See page 9 for Miller spool assembly or alternative.

X Robot Controller Connection

- **a** **Modbus TCP** — Requires Ethernet cable. 2 m cable included with power source. See page 9 for individual cables.
- **b** **EtherNet/IP™** — Requires Ethernet cable. 2 m cable included with power source. See page 9 for individual cables.

Cobot Ordering Information

EQUIPMENT AND OPTIONS	STOCK NO.	DESCRIPTION	QTY.	PRICE
1 Power Source				
Auto Deltaweld™ 350	**907893**	350 A, 380/400 V, for Modbus or EtherNet/IP™ robot controller		
2 Wire Drive Motor Assembly				
Auto Deltaweld Fixed Wire Drive	**301881**	Left-hand fixed wire drive		
3 ArcConnect™ Motor Control Cable (Choose One)				
90 Degree ArcConnect Cable	**294080006**	1.8 mm		
Standard ArcConnect Cable	**280471009** **280471015** **280471025**	2.7 m 4.6 m 7.6 m		
4 Work Cables		Order work cables separately from Miller or from your integrator		
5 Robotic Torches				
Tregaskiss® Robotic MIG Torches, Peripherals and Consumables		Order separately. Visit BernardTregaskiss.com for models and information on robotic MIG torches, reamers, QUICK LOAD® liners and TOUGH LOCK® consumables		
Accessories				
6 Base and Spool Support	**301752**			
Upright with Hub and Spindle	**301753**			
Spool Cover	**295231**			
Volt-Sense Cable	**242212050**	15.2 m		
Ethernet Cables	**300734** **300736**	3 m 10 m *Note: power source includes a 2 m Ethernet cable.*		
Tregaskiss® High-Deposition MIG Consumables	**401-9-75** **D-ATSH**	Nozzle Diffuser		
Wire Straightener	**141580** **141581**	For 0.9–1.1 mm wire For 1.6–3.2 mm wire		
Coolant Systems		See page 7		
Coolant	**043809**	Sold in cases of four one-gallon recyclable plastic bottles		
Drive Rolls		See page 7		

DATE: TOTAL QUOTED PRICE:

Traditional Robot Installations (Robot and fixed/automation pulsed MIG or conventional MIG.)

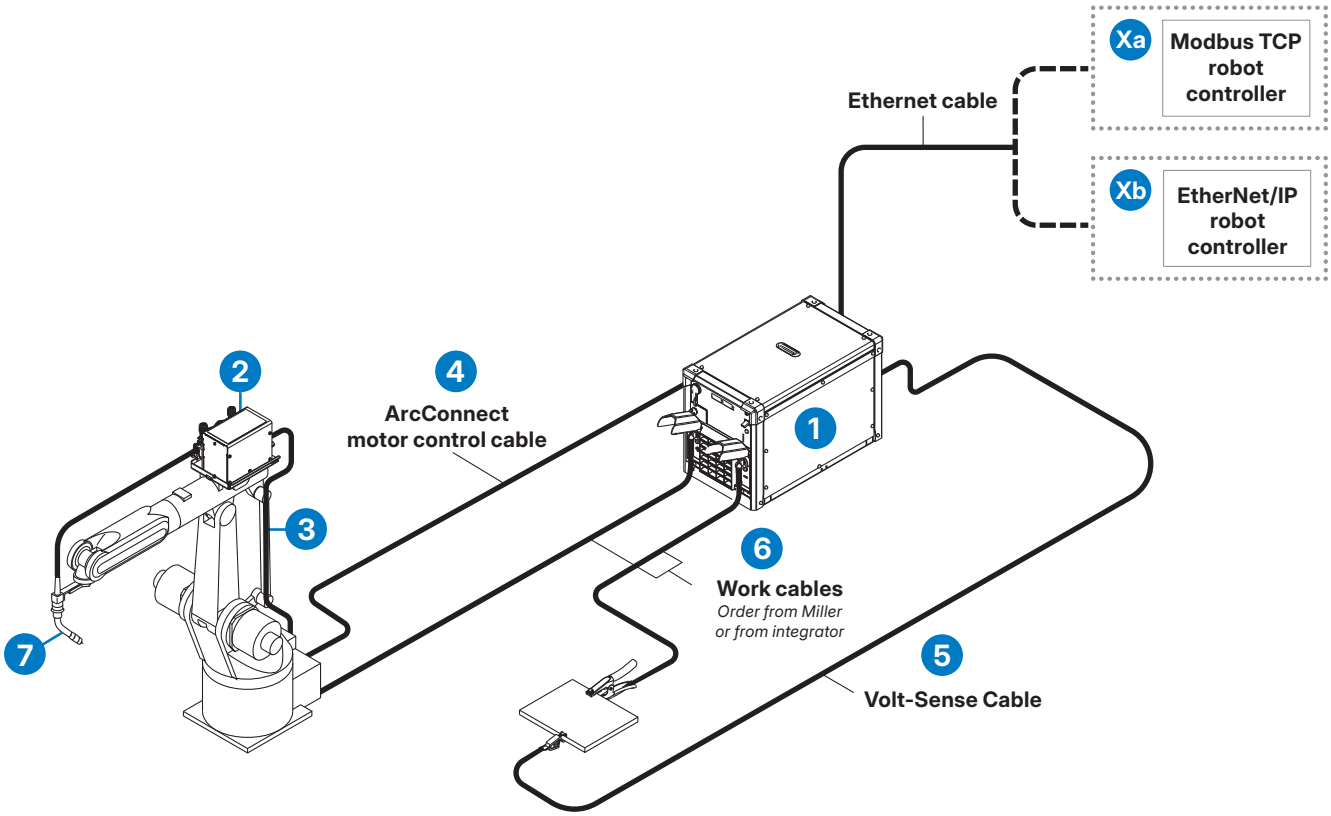

1 Power Source

See page 11. All power sources are equipped with both Modbus TCP and Ethernet/IP communication, and include a 2 m Ethernet communication cable.

2 Wire Drive

See page 11. The Auto Elite Wire Drive is designed for traditional robotic applications. Quick release is standard on feeder.

3 Robot Arm Mounting Kits

See page 11. Kit includes all mounting brackets, power cable, shielding gas line and motor control cable.
Note: "Generic" listing is only for the motor control cable from base of robot to the feeder.

4 ArcConnect Motor Control Cable

See page 11 for available ArcConnect cables.

5 Volt-Sense Cable

See page 11 for 15.2 m cable.

6 Work Cables

Order work cables separately from Miller or from your integrator.

7 Tregaskiss® Robotic MIG Torch

Must be ordered separately. Visit ***BernardTregaskiss.com*** for torch models and additional information.

X Robot Controller Connection

- a **Modbus TCP** — Requires Ethernet cable. 2 m cable included with power source. See page 9 for individual cables.
- b **EtherNet/IP™** — Requires Ethernet cable. 2 m cable included with power source. See page 9 for individual cables.

Traditional Robot Ordering Information

	EQUIPMENT AND OPTIONS	STOCK NO.	DESCRIPTION	QTY.	PRICE
1	**Power Source**				
	Auto Deltaweld™ 350 (volt-sense cable not included)	**907893**	350 A, 380/400 V, for Modbus or EtherNet/IP™ robot controller		
2	**Wire Drive**				
	Auto Elite Wire Drive	**301768**	Left-hand wire drive		
3	**Robotic Arm Mounting Kits (Choose One)**				
	FANUC	**301896**	100ID and 120ID		
	Kawasaki	**301893** **301894** **301895**	BA006L BA013L RS010L		
	KUKA	**301890** **301891**	KR6 R1440 KR6 R2010		
	Panasonic	**301864**	TM G3		
	Generic (motor control cable from base of robot to feeder only)	**297815010** **297815012**	3 m 3.6 m		
4	**ArcConnect™ Motor Control Cable (Choose One)**		Distance between power source and robot		
	90 Degree ArcConnect Cable	**294080006**	1.8 m		
	Standard ArcConnect Cable	**280471009** **280471015** **280471025** **280471050** **280471075** **280471100** **280471150**	2.7 m 4.6 m 7.6 m 15.2 m 22.9 m 30.5 m 45.7 m		
5	**Volt-Sense Cable**	**242212050**	15.2 m		
6	**Work Cables**		Order work cables separately from Miller or from your integrator		
7	**Work Cables**		Order work cables separately from Miller or from your integrator		
	Accessories				
	Upright with Hub and Spindle	**301753**			
	Spool Cover	**295231**			
	Ethernet Cables	**300734** **300736**	3 m 10 m *Note: power source includes a 2 m Ethernet cable.*		
	Tregaskiss® High-Deposition MIG Consumables	**401-9-75** **D-ATSH**	Nozzle Diffuser		
	Wire Straightener	**141580** **141581**	For 0.9–1.1 mm wire For 1.6–3.2 mm wire		
	Coolant Systems		See page 7		
	Coolant	**043809**	Sold in cases of four one-gallon recyclable plastic bottles		
	Drive Rolls		See page 7		

DATE: TOTAL QUOTED PRICE:

Distributed by:

Miller
The Power of Blue®

© 2026 Miller Electric Mfg. LLC